MR16 Remote Sealed Ingrade **MODEL IG4**
12V 42W Max., MR16 Halogen
12V 8W Max., COB LED w/ Driver

Installation Instructions

INSTRUCTIONS PERTAINING TO A RISK OF FIRE, OR INJURY TO PERSONS. IMPORTANT SAFETY INSTRUCTIONS. SAVE THESE INSTRUCTIONS.

(Failure to follow the warnings and instructions on this sheet could result in fire, injury, failure of product, and/or voiding of warranty.)

1. Do not touch while lamp is on. Turn off/unplug and allow to cool before replacing lamp.
2. Lamp gets HOT quickly! Contact only switch/plug when turning on.
3. Keep lamp away from materials that may burn.
4. Do not install fixture in contact with combustible materials.
5. Do not touch lamp at any time. Use a soft cloth. Oil from your skin may damage lamp.
6. Do not operate with damaged or missing parts.
7. Do not disassemble beyond faceplate removal to facilitate lamp and accessory installation/replacement, or as otherwise directed in the installation instructions below.
8. Remove any debris or build-up accumulated on the faceplate or lens periodically. Replace lens if necessary. Failure to do so could result in reduction in performance, fixture overheating, or fire.
9. Do not install within 10 feet of a pool, spa, or fountain.
10. Have installed in accordance with all applicable installation codes and standards by a person familiar with the construction, operation, and hazards involved. Consult a qualified electrician to ensure correct branch circuit conductor.
11. Use only cable rated for low voltage. Cable buried more than 6" must be suitable for direct burial. Direct burial cable may be ordered from Vision3 Lighting.
12. Lens temperatures can get hot enough, with some lamps, to cause injury when touched. See Lens Temperature table below and take proper precautions.
13. Failure to follow these instructions can cause fire, injury, and/or void warranty.

1 - Notes:

- This fixture should not be mounted in such a way that the Faceplate is buried or below grade.
- This fixture requires a remote transformer.
- Wiring connections must not be exposed to moisture/water. All wiring must be done in an industry standard water tight manner. Failure to do so could result in a failure from water being siphoned into the Housing thru the wire strands in the Power Cable.
- LED models should only be powered and controlled by compatible transformers and control systems. Contact Vision3 Lighting for approved transformer / controls list. Using non-approved transformers / controls could cause the LED to not operate properly or fail.
- Integral LED options come with a High/Low switch. See 'LED Switching' instructions on next page. Switch will be set to 'High' setting at the factory, unless otherwise specified when ordered.
- Use only Vision3 approved Retrofit MR16 LED options and supplied Heatsink Mount, otherwise LED may overheat and fail.
- LED ratings subject to change without notice. See website or contact V3 for most current info.
- Lens temperatures can get hot enough, with some lamps, to cause injury when touched. See Lens Temperature table and take proper precautions.
- **Caution!** Fixture will be hot if lamp is on. Remove power and allow fixture to cool before performing any adjustments or maintenance.

Lens Temperature

Lamp	T_{lens}[1]
LED	45ºC to 50ºC
20W & 20W IR	90ºC to 110ºC
35W & 37W IR	117ºC to 153ºC
42W	130ºC to 160ºC

1 - varies with lamp and lens options.

Note Lens temperatures can get hot enough, with some lamps, to cause injury when touched. These lamps should not be used where it is possible for the lens to be touched.

Model IG4 Exploded Assembly
(shown with MR16H Lamp Module)

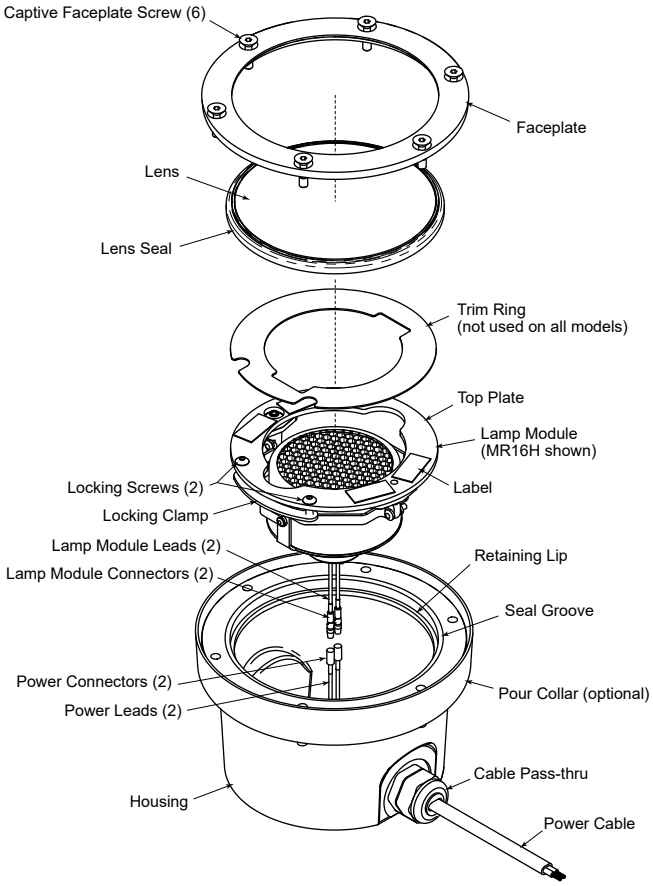

Installation Instructions

INSTRUCTIONS PERTAINING TO A RISK OF FIRE, OR INJURY TO PERSONS.
IMPORTANT SAFETY INSTRUCTIONS. SAVE THESE INSTRUCTIONS.
(Failure to follow the warnings and instructions on this sheet could result in fire, injury, failure of product, and/or voiding of warranty.)

2 - Unpack and Inspect:

Unpack:

1. Unpack the fixture from its box.
2. Check through all packaging material to make sure there aren't any items hidden in it before discarding.

Inspection:

1. Referring to the 'Model IG4 Components' sketch, along with the packing list and order, check that all components are accounted for. Contact Vision3 lighting immediately if any discrepancies are found. **Note**: depending on the options and accessories ordered, certain components may not be included.
2. Inspect all parts for shipping damage, such as: broken lenses, broken lamps, cut or nicked leads, damage to the Cable Pass-thru that could cause leaks, damaged lens seal, etc. If any damage is found, do not install fixture. Contact Vision3 lighting so that damaged items can be repaired or replaced.
3. Cover and store all parts in a clean, dry, and safe place until it is time for installation. Make sure that the Housing is stored with the Dust Cover installed. **Note**: Plastic bags are handy for keeping parts organized and clean during storage.

Model IG4 Components

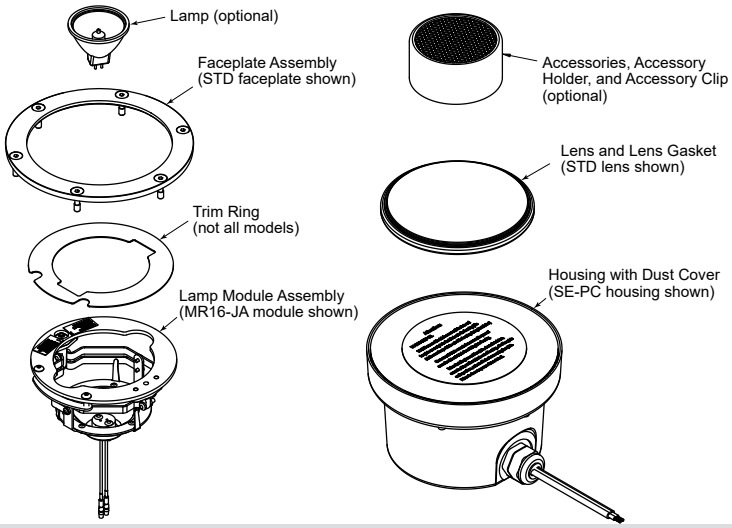

3 - Housing Installation:

Housing can be installed in different ways depending on housing option and application, as follows:

Recommended Ground Mount Landscape Installation

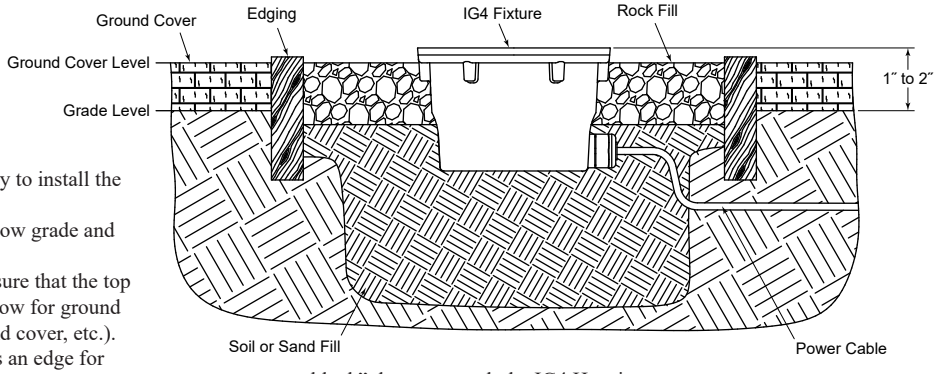

Ground Mounted Landscape:

1. Examine Housing to ensure that there is no damage, visible defects, or missing parts. Contact Vision3 lighting if any issues are found. Leave the Dust Cover installed during installation and do not remove until you are ready to install the Lamp Module and Faceplate.
2. Dig hole approximately 12" dia. by 8" to 12" below grade and trench for direct burial power cable.
3. Install edging around the hole, as shown. Make sure that the top of the edging is about 1" to 2" above grade to allow for ground covering (such as bark, rock, low growing ground cover, etc.). The edging prevents lens overgrowth and creates an edge for trimming, while the elevation helps prevent submersion in water during rain. Once the ground cover is in place or grows high enough, the fixture will appear to be flush.
4. Begin filling in the hole with soil in 1" to 2" increments, compacting as you go, until the IG4 Housing can be placed at the bottom of the hole with the top of the housing 1/4" above the top of the edging. **Note**: If the local soil conditions prevent proper drainage, such as with clay, it is recommended that sand or a loose soil/peat gravel mixture be used to backfill the hole. It may also be required to dig a deeper hole to allow for thorough drainage around fixture.
5. Place the IG4 Housing in the bottom of the hole in the desired orientation and route the Power Cable out the trench previously dug.
6. Continue filling around the IG4 Housing, compacting as you go. Be careful to not damage the Power Cable or Cable Pass-thru when compacting. Fill to 1 1/2" above the bottom of the IG4 Housing. The Cable Pass-thru should be completely covered at this point.
7. Fill the remaining area in the hole with rock/gravel, up to within 1/4" of the top of the IG4 Housing. It is recommended that landscape "weed block" material be used between the Soil/Sand Fill and the Rock Fill to prevent growth of weeds and mixing of materials. Make sure the "weed block" does not touch the IG4 Housing.
8. Attach the Power Cable to the power supply using appropriate connectors. If the Power Cable is to be connected to the power supply wiring underground, make sure to use connectors approved for direct burial use. **Note:** This fixture requires a remote transformer. LED models should only be powered by a magnetic transformer or Vision3 Lighting approved electronic transformer. Contact Vision3 Lighting for further information. Also note the wattage of the lamps being used and make sure the power supply is properly sized.
9. Fill in the wiring trenches, being careful to not damage any wiring or connections.
10. Install the Lamp Module, Lamp, Accessories, and Faceplate (see instructions below). **Note**: Make sure that the power to the fixture is off. **Warning**: Look at the 'Lens Temperature' table on page one to make sure that the lamp you are using will not cause injury if the fixture is being used where someone can touch the lens.
11. Power on the system to test that the fixture and wiring are performing properly.
12. Install desired Ground Cover up to Edging.

Installation Instructions

INSTRUCTIONS PERTAINING TO A RISK OF FIRE, OR INJURY TO PERSONS. IMPORTANT SAFETY INSTRUCTIONS. SAVE THESE INSTRUCTIONS.

(Failure to follow the warnings and instructions on this sheet could result in fire, injury, failure of product, and/or voiding of warranty.)

Ground Mounted Concrete:

1. Before beginning housing installation, examine Housing to ensure that there is no damage, visible defects, or missing parts. Contact Vision3 lighting if any issues are found. Leave the Dust Cover installed during installation and do not remove until you are ready to install the Lamp Module and Faceplate. **Note**: Only IG4 Housings with the Pour Collar option should be installed in concrete. If your Housing does not have the Pour Collar option, please contact Vision3 lighting.
2. Dig a hole approximately 12" dia. by 8" to 12" below grade and trench for direct burial power cable.
3. Begin filling in the hole with peat gravel until the IG4 Housing can be placed at the bottom of the hole with the top of the Pour Collar on the IG4 Housing flush with the proposed Ground Cover Level, usually 1" to 2" above Grade Level.
4. Place the IG4 Housing in the bottom of the hole in the desired orientation, as described in the previous step, and route the Power Cable along the trench previously dug.
5. Continue filling with peat gravel around the IG4 Housing. Fill to 1 1/2" above the bottom of the IG4 Housing. The Cable Pass-thru should be completely covered at this point. Damage to the Cable Pass-thru could cause the IG4 Housing to leak, so be very careful to not damage it.
6. Attach the Power Cable to the power supply using appropriate connectors. If the Power Cable is to be connected to the power supply wiring underground, make sure to use connectors approved for direct burial use. **Note:** This fixture requires a remote transformer. LED models should only be powered by a magnetic transformer or Vision3 Lighting approved electronic transformer. Contact Vision3 Lighting for further information. Also note the wattage of the lamps being used and make sure the power supply is properly sized.

Recommended Ground Mount Concrete Installation

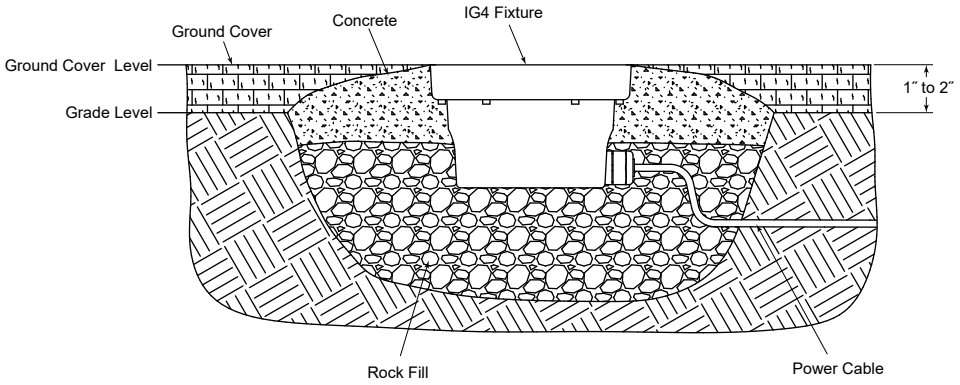

7. Once the power connections are made, it is usually a good idea to test the fixture to make sure connections are made properly. If the Lamp Module has not been installed, you can temporarily install it (see instructions below) and power on the system to test the wiring. When done testing, make sure to re-install the dust cover.
8. Fill in the wiring trenches, being careful to not damage any wiring or connections.
9. Fill in the rest of the hole around the IG4 housing with concrete, up to the top of the Pour Collar. Do not allow any concrete to enter the IG4 Housing. Reinforcing rods must be used in the concrete to prevent cracking of the concrete from the heat of the fixture.
10. Install the Lamp Module, Lamp, Accessories, and Faceplate (see instructions below). **Note**: Make sure that the power to the fixture is off. **Warning**: Look at the 'Lens Temperature' table on page one to make sure that the lamp you are using will not cause injury if the fixture is being used where someone can touch the lens.
11. Install Ground Cover up to edge of Concrete, making sure to not cover Faceplate. **Note**: If fixture is being installed in concrete slab, skip this step.

Flanged Housing:

The Flanged Faceplate option utilizes a larger diameter faceplate that overlaps the flooring material to hide any trim cuts made during installation of tile or stone flooring. Because of this, the housing must be installed in a 'core drill' type installation. **Note**: If installed in concrete, this installation does not prevent water from rising up thru the Mount Hole. Other precautions must be taken to prevent this, such as using silicone around the housing and flange, depending on your particular installation.

1. Before beginning housing installation, examine Housing to ensure that there is no damage, visible defects, or missing parts. Contact Vision3 lighting if any issues are found. Leave the Dust Cover installed during installation and do not remove until you are ready to install the Lamp Module and Faceplate. **Note**: Only IG4 Housings with the Flanged Faceplate option should be installed in core drill applications. If your Housing does not have this option, please contact Vision3 lighting.
2. Cut a Ø6 1/8" Mount Hole into the flooring material and substrate. Make sure that there is enough room for the depth of the fixture and wiring. In the case of a concrete substrate, the pad should be poured with mount holes, if possible, with provisions made for supplying power to the fixture.
3. Run properly sized power supply cable (supplied separately) to the Mount Hole.
4. Attach the Power Cable to the power supply using appropriate connectors. If the Power Cable is to be connected to the power supply wiring underground, make sure to use connectors approved for direct burial use. **Note:**

Recommended Flanged (Core Drill) Installation

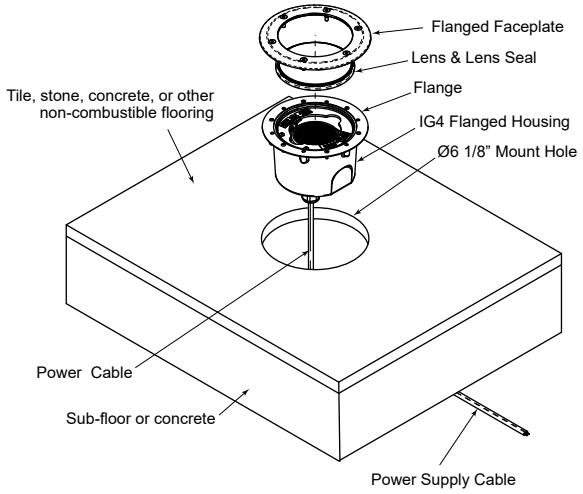

Installation Instructions

INSTRUCTIONS PERTAINING TO A RISK OF FIRE, OR INJURY TO PERSONS.
IMPORTANT SAFETY INSTRUCTIONS. SAVE THESE INSTRUCTIONS.
(Failure to follow the warnings and instructions on this sheet could result in fire, injury, failure of product, and/or voiding of warranty.)

This fixture requires a remote transformer. LED models should only be powered by a magnetic transformer or Vision3 Lighting approved electronic transformer. Contact Vision3 Lighting for further information. Also note the wattage of the lamps being used and make sure the power supply is properly sized.

5. Once the power connections are made, it is usually a good idea to test the fixture to make sure connections are made properly. If the Lamp Module has not been installed, you can temporarily install it (see instructions below) and power on the system to test the wiring. When done testing, make sure to re-install the dust cover.
6. Apply an appropriate construction adhesive to the bottom of the Flange. **Note**: First make sure that the flange and floor are clean and free of dirt, oil, and moisture.
7. Place the housing into the Mount Hole, ensuring that it is centered. Make sure that the Power Cable is not cut or pinched in any way when feeding into the Mount Hole.
8. Allow the construction adhesive to cure.
9. Install the Lamp Module, Lamp, Accessories, and Faceplate (see instructions below). **Note**: Make sure that the power to the fixture is off. **Warning**: Look at the 'Lens Temperature' table on page one to make sure that the lamp you are using will not cause injury if the fixture is being used where someone can touch the lens.

4 - Lamp Module Installation:

1. Remove the Dust Cover from the Housing.
2. Clean all moisture, dirt, and debris out of the Housing.
3. Inspect the Housing for any damage, especially at the wire entry where damage may allow water to enter.
4. Inspect the Lamp Module for any damage to the brackets, wiring, connectors, sockets, etc. Make sure the brackets allow for the proper range of motion.
5. Grasp one of the Lamp Module Connectors by the barrel and gently push into one of the Power Connectors. Make sure the insulation covering the Power Connector is not damaged and that both the Power Connector and the Lamp Module Connector are fully covered and insulated.
6. Repeat the previous step for the remaining Lamp Module Connector and Power Connector.
7. Loosen the Locking Screws (2) on the Lamp Module using a 3/32" hex tool until the gap between the Locking Clamp and the Lamp Module Top Plate is approximately 1/4" to 3/8". Make sure you don't loosen the Locking Screws (2) completely out of the Locking Clamp.
8. Install the Lamp Module by slipping the Locking Clamp under the Retaining Lip in the Housing, and dropping the module in such that the Top Plate rests on the Retaining Lip. **Note**: Make sure the Lamp Module Leads and Power Leads are below the base of the Lamp Module. As you install the Lamp Module into the Housing, slightly rotate module in one direction to help 'coil' the Lamp Module and Power Leads into the housing. This will help keep them from contacting the light source or rubbing on the brackets.
9. Tighten both Locking Screws by turning clockwise with a 3/32" hex tool. Tighten until the Locking Clamp compresses against the Retaining Lip enough to prevent rotation of the Lamp Module.
10. Install the Lamp and Accessories as explained in the Lamp and/or Accessory Maintenance section.
11. Aim the Lamp as described in the Aiming section.
12. Place the Trim Ring over the Lamp Module, making sure that the cutouts in the Trim Ring line up with the Locking Screws and brackets so that it sits flush on the Top Plate. **Note**: Trim Ring may not be furnished with all models.

5 - Faceplate Installation:

Standard Faceplate:

1. Clean the Seal Groove and exposed top surface of the Housing so that it is free from moisture, dirt, and debris.
2. Inspect the Seal Groove and exposed top surface of the Housing for nicks, scratches, or dents in the material that may affect seating or sealing of the Lens Seal and Faceplate.
3. Clean and inspect the Lens and Lens Seal. The Lens should be free of dirt, deposits, nicks, or cracks. The Lens Seal should be free of dirt, deposits, nicks or tears. If the Lens and/or Lens Seal can not be completely cleaned, or are damaged, contact Vision3 lighting for replacement parts.
4. Install the Lens Seal by gently stretching around the Lens. See the 'Faceplate and Lens Orientation' sketch for proper orientation.

Faceplate and Lens Orientation

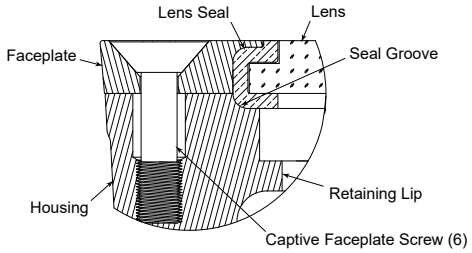

5. Set the Lens with attached Lens Seal into the Seal Groove in the Housing, as shown.
6. Clean and inspect the Faceplate and Captive Faceplate Screws (6). The Captive Faceplate Screws (6) are shipped from the factory with an anti-seize compound on the threads. If the anti-seize has been accidentally wiped off, or has become contaminated with dirt, thoroughly clean the threads and coat with an anti-seize compound. Failure to do this may cause the screws to seize in the housing and prevent their removal without damaging the fixture.
7. Set the Faceplate over the top of the Housing such that the Lens/Lens Seal fits into the groove on the bottom of the Faceplate. Orient so the Captive Faceplate Screws (6) drop into the mating clearance holes in the Housing.
8. Tighten the Captive Faceplate Screws (6) by turning clockwise with a 1/8" hex tool. The Captive Faceplate Screws (6) should be tightened by hand only! Using a cordless drill will cause the Faceplate to be tightened unevenly or possibly strip the threads in the Housing. Torque the screws incrementally, and evenly, to 20 in-lbs, in a criss-cross pattern. **Note**: It is best to use a torque wrench, but you can also use the following procedure to approximate the proper torque: as you tighten you will feel the Faceplate compress the Lens Seal until the Faceplate seats against the top of the Housing. At this point, there will be a dramatic increase in the amount of effort required to tighten each screw. Do not turn the screws more than 1/8 to 1/4 turn past this point. Do not overtighten as you may strip the threads out of the Housing. Once the Lens Seal has been compressed such that the Faceplate touches the top of the Housing, the fixture is sealed. Tightening the screws further offers no advantage.

Accessory Faceplate
(Rock Guard, Half Dome, Glare Shield, Marker Light, etc.):

1. Clean the Seal Groove and exposed top surface of the Housing so that it is free from moisture, dirt, and debris.
2. Inspect the Seal Groove and exposed top surface of the Housing for nicks, scratches, or dents in the material that may affect seating or sealing of the Lens Seal and Faceplate.

Installation Instructions

INSTRUCTIONS PERTAINING TO A RISK OF FIRE, OR INJURY TO PERSONS.
IMPORTANT SAFETY INSTRUCTIONS. SAVE THESE INSTRUCTIONS.
(Failure to follow the warnings and instructions on this sheet could result in fire, injury, failure of product, and/or voiding of warranty.)

3. Clean and inspect the Lens and Lens Seal. The Lens should be free of dirt, deposits, nicks, or cracks. The Lens Seal should be free of dirt, deposits, nicks or tears. If the Lens and/or Lens Seal can not be completely cleaned, or are damaged, contact Vision3 lighting for replacement parts.
4. Install the Lens Seal by gently stretching around the Lens. See the 'Faceplate and Lens Orientation' sketch for proper orientation.
5. Set the Lens with attached Lens Seal into the Seal Groove in the Housing, as shown.
6. Clean and inspect the Accy Faceplate, Faceplate Clamp, and Captive Faceplate Screws (6). The Captive Faceplate Screws (6) are shipped from the factory with an anti-seize compound on the threads. If the anti-seize has been accidentally wiped off, or has become contaminated with dirt, thoroughly clean the threads and coat with an anti-seize compound. Failure to do this may cause the screws to seize in the housing and prevent their removal without damaging the fixture.
7. Set the Accy Faceplate over the top of the Housing such that the Lens/Lens Seal fits into the groove on the bottom of the Accy Faceplate. Make sure that the faceplate is rotated to the desired orientation.
8. Place the Faceplate Clamp over the Accy Faceplate and orient so that the Captive Faceplate Screws (6) drop into the mating clearance holes in the Housing.
9. Tighten the Captive Faceplate Screws (6) by turning clockwise with a 1/8" hex tool. The Captive Faceplate Screws (6) should be tightened by hand only! Using a cordless drill will cause the Faceplate to be tightened unevenly or possibly strip the threads in the Housing. Torque the screws incrementally, and evenly, to 20 in-lbs, in a criss-cross pattern. **Note**: It is best to use a torque wrench, but you can also use the following procedure to approximate the proper torque: as you tighten you will feel the Faceplate compress the Lens Seal until the Faceplate seats against the top of the Housing. At this point, there will be a dramatic increase in the amount of effort required to tighten each screw. Do not turn the screws more than 1/8 to 1/4 turn past this point. Do not overtighten as you may strip the threads out of the Housing. Once the Lens Seal has been compressed such that the Faceplate Clamp touches the top of the Housing, the fixture is sealed. Tightening the screws further offers no advantage.

Accy Faceplate Installation

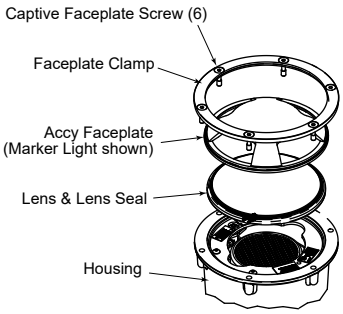

6 - Lamp Module and Accessory Maintenance:

The Lamp Module and Accessory maintenance procedures depend on the type of light engine being used. See maintenance instructions below that are applicable to your particular fixture.

Faceplate Removal:

1. Remove power from the fixture and let cool before touching.
2. Remove any moisture, dirt, or debris from around the IG4 Fixture and on the Faceplate. To remove dirt or debris that has been compacted into the heads of the Captive Faceplate Screws (6), use a small screw driver or stiff piece of wire to scrape and loosen the debris. Compressed 'air in a can' (such as used for cleaning computers) is very handy for blowing debris off of the Faceplate, out of the screw heads, and out of the Housing.
3. Loosen the Captive Faceplate Screws (6) by turning counter-clockwise with a 1/8" hex wrench. **Note**: These screws are captive and should not be removed from the Faceplate. If each screw is loosened a turn or two at a time, in a criss-cross pattern, this will help prevent the screw from threading into the Faceplate. If the screws have become seized and cannot be loosened, use a handheld impact driver to help break them loose; otherwise, you risk stripping out the heads.
4. Remove the Faceplate (or Faceplate Clamp and Accy Faceplate if an Accy Faceplate is installed) and set aside.
5. Remove the Lens and Lens Seal and set aside.

MR16 Halogen Lamp Module Maintenance:

1. Remove the Faceplate and Lens as described in Faceplate Removal.
2. Remove the Accessory Holder and Accessories, if any, by lifting straight out of the Lamp Module and set aside.
3. For MR16 halogen lamp replacement:
   a. Pull the MR16H Lamp straight out. **Caution!** The Lamp may still be hot! Be sure the Lamp has cooled before touching.
   b. Inspect the Lamp Socket for any damage.
   c. Push the new MR16H Lamp straight in, being careful to align the lamp pins with the holes in the Lamp Socket. **Note**: Make sure a proper wattage MR16H Lamp is being used. See fixture Labels or specification sheet for fixture ratings.
4. For Accessory maintenance:
   a. Remove the Accessory Clip from the Accessory Holder. **Caution!** The Accessories may still be hot! Be sure the Accessory Holder has cooled before touching.
   b. Carefully remove the Accessories from the Accessory Holder, if any.
   c. Clean the Accessory Holder and Accessory Clip with a clean, damp cotton cloth.
   d. Clean the new and/or re-used Accessories with a clean, damp cotton cloth.
   e. Carefully install Accessories into the Accessory Holder.
   f. Compress the Accessory Clip and push it into the Accessory Holder until it tightly retains the Accessories.
7. Set the Accessory Holder in the Lamp Module so that it covers the lamp.
8. Install the Faceplate and Lens as described in Faceplate Installation.

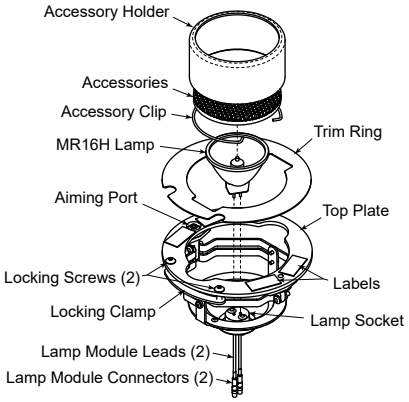

MR16H Lamp Module
(joystick aiming option shown)

Retrofit MR16 LED Lamp Module Maintenance:

1. Remove the Faceplate and Lens as described in Faceplate Removal.
2. For Accessory maintenance:
   a. Remove the Accessories from Lamp Module. Note: LED Lamp Modules do not have a separate holder. Accessories rest on top of the LED and are contained by the Lamp Module itself.
   b. Clean the new and/or re-used Accessories with a clean, damp cotton cloth.
   c. Carefully set the Accessories into the Lamp Module on top of the Retrofit MR16 LED.

Installation Instructions

INSTRUCTIONS PERTAINING TO A RISK OF FIRE, OR INJURY TO PERSONS. IMPORTANT SAFETY INSTRUCTIONS. SAVE THESE INSTRUCTIONS.

(Failure to follow the warnings and instructions on this sheet could result in fire, injury, failure of product, and/or voiding of warranty.)

3. For Retrofit MR16 LED replacement:
   a. Remove Accessories.
   b. Pull the Retrofit MR16 LED straight out. Note: you may need to first push LED out from gap in lower brackets. **Caution!** LED may still be hot! Be sure LED has cooled before touching.
   c. Inspect the Lamp Socket for any damage.
   d. Push new Retrofit MR16 LED straight in, being careful to align pins. Make sure Retrofit MR16 LED fully contacts the Heatsink, otherwise LED may overheat and fail prematurely. Note: Replacement LED must not exceed ratings on Label. Only use Vision3 approved Retrofit MR16 LED and supplied Heatsink Mount, otherwise LED may overheat and fail.
   e. Set the Accessories on top of the Retrofit MR16 LED.
4. Install the Faceplate and Lens as described in Faceplate Installation.

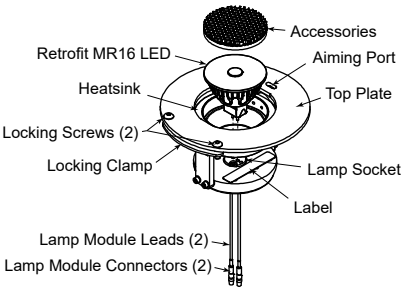

Retrofit MR16 LED Lamp Module

Integral LED Lamp Module Maintenance:

1. Remove the Faceplate and Lens as described in Faceplate Removal.
2. For Accessory maintenance:
   a. Remove the Accessories from Lamp Module. Note: LED Lamp Modules do not have a separate holder. Accessories rest on top of the Integral LED Module and are contained by the Lamp Module itself.
   b. Clean the new and/or re-used Accessories with a clean, damp cotton cloth.
   c. Carefully set the Accessories into the Lamp Module on top of the Integral LED Module.
3. For Integral LED Module replacement:
   a. Remove Accessories
   b. Loosen and remove the LED Module Screws
   c. Pull Integral LED Module straight out. Do not twist or the pins will break off in the socket. **Caution!** LED may still be hot! Be sure LED has cooled before touching.
   d. Clean the grease off of the Heatsink top surface using a rag dipped in alcohol.
   e. Inspect the socket for any damage.
   f. If the replacement Integral LED Module does not come with a thermal transfer pad on the base, apply a thin layer of thermal grease (not supplied) to the surface of the Heatsink that will contact the bottom of the Integral LED Module.
   g. Align the pins on the Integral LED Module with the socket and push straight in. Do not twist or push in at an angle or the pins may be damaged.
   h. Install and tighten the LED Module Screws. **Caution!** Over tightening of screws could crack the Integral LED Module case.
   i. Set the Accessories on top of the Integral LED Module.

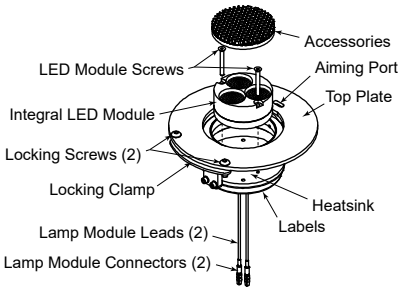

Integral LED Lamp Module

4. For Integral LED Output Switching:
   Integral LED Module options come with a High/Low switch. Follow these steps to switch between the two. Note: Switch will be set to 'High' setting at the factory, unless otherwise specified when ordered.
   a. Remove the Integral LED Lamp Module assembly by loosening the Locking Screws (2) and lifting out of the Housing.
   b. Inspect for damage. Replace any damaged parts, if necessary.
   c. Clean all parts and inside of fixture with a clean, damp cotton cloth.
   d. Find LED High/Low Switch on side of Integral LED Module.
   e. Using a pin, small nail, etc, flip the switch in the desired direction. See the LED Module Switch sketch for which direction corresponds to which setting.
   f. Re-install the Integral LED Lamp Module assembly as explained in Lamp Module Installation.
5. Install the Faceplate and Lens as described in Faceplate Installation.

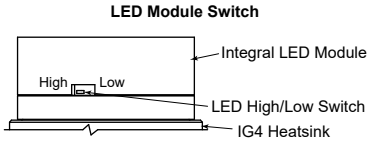

COB LED Lamp Module Maintenance:

1. Remove the Faceplate and Lens as described in Faceplate Removal.
2. For Accessory maintenance:
   a. Remove the Accessories from Lamp Module. Note: COB LED Lamp Module does not have a separate accessory holder. Accessories rest on top of the COB LED Reflector and are contained by the Lamp Module itself.
   b. Clean the new and/or re-used Accessories with a clean, damp cotton cloth.
   c. Carefully set the Accessories into the Lamp Module on top of the Reflector.
3. For Changing COB LED Optics:
   a. Loosen the Locking Screws (2) on the COB LED Lamp Module using a 3/32" hex tool.
   b. Lift out the COB LED Lamp Module and disconnect the Lamp Module Connectors (2) from the Power Connectors (2).
   c. Remove the Bracket Screws (4) and Bracket Washers (4) and remove the COB Heatsink / Mount assembly from the Top Plate assembly. Set aside the Top Plate assembly.
   d. Twist Reflector counter-clockwise to unlock and remove. Note: if the

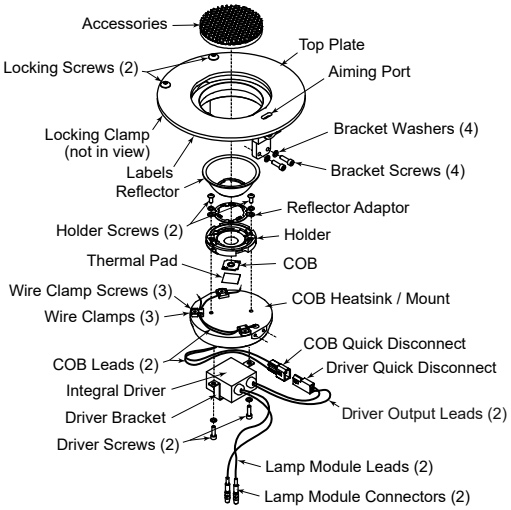

COB LED Lamp Module

Installation Instructions

INSTRUCTIONS PERTAINING TO A RISK OF FIRE, OR INJURY TO PERSONS.
IMPORTANT SAFETY INSTRUCTIONS. SAVE THESE INSTRUCTIONS.
(Failure to follow the warnings and instructions on this sheet could result in fire, injury, failure of product, and/or voiding of warranty.)

COB LED Chip needs maintenance, now is a good time to do that as well.

e. Insert the new Reflector and twist clockwise to lock.
f. Reinstall the COB Heatsink / Mount assembly into the Top Plate assembly using the same hardware.
g. Install the COB LED Lamp Module as described in Lamp Module Installation.
h. Install the Faceplate and Lens as described in Faceplate Installation.

4. For Changing COB LED Chip:
   a. Loosen the Locking Screws (2) on the COB LED Lamp Module using a 3/32" hex tool.
   b. Lift out the COB LED Lamp Module and disconnect the Lamp Module Connectors (2) from the Power Connectors (2).
   c. Remove the Bracket Screws (4) and Bracket Washers (4) and remove the COB Heatsink / Mount assembly from the Top Plate assembly. Set aside the Top Plate assembly.
   d. Twist Reflector counter-clockwise to unlock and remove.
   e. Loosen and remove the Wire Clamp Screws (3) and remove the Wire Clamps (3).
   f. Loosen and remove the two Holder Screws, the Optics Adapter, and the Holder. Note: Twist Holder to ease removal.
   g. Noting the orientation of the COB in the Holder, compress the Holder clip and carefully remove the COB chip.
   h. Thoroughly clean the mounting surface of COB Heatsink / Mount with a lint free towel. Use alcohol if there us any grease or residue.
   i. Place the new COB up against the Holder clip in the same orientation as the removed COB. Ensure the polarity marks on the Holder match the marks on the COB. Slowly press on the opposite side of COB to compress the Holder clip until the COB drops into the recess. Note: Only touch the edges of the COB as oils and dirt from your skin can damage the diodes.
   j. Remove clear plastic film from one side of the supplied Thermal Pad. Using light pressure, apply to the back of the new COB chip. Make sure pad is square and fully covers the back of the COB. Remove secondary clear plastic film from the exposed side of the Thermal Pad.
   k. Place the Holder and Optics Adapter on the COB Heatsink / Mount in the same orientation it was removed.
   l. Install and tighten the Holder Screws (2). Do not overtighten.
   m. Reinstall the Wire Clamp (3) and the Wire Clamp Screws (3). Note: Route the COB Leads the same as when clamps were removed.
   n. Insert the Reflector and twist clockwise to lock. Note: If any Reflector maintenance is required, now is a good time to do it.
   o. Reinstall the COB Heatsink / Mount assembly into the Top Plate assembly using the same hardware.
   p. Install the COB LED Lamp Module as described in Lamp Module Installation.
   q. Install the Faceplate and Lens as described in Faceplate Installation.
5. For Replacing Driver:
   a. Loosen the Locking Screws (2) on the COB LED Lamp Module using a 3/32" hex tool.
   b. Lift out the COB LED Lamp Module and disconnect the Lamp Module Connectors (2) from the Power Connectors (2).
   c. Disconnect the Driver Quick Disconnect from the COB Quick Disconnect.
   d. Loosen and remove the Driver Screws (2), Driver Bracket, and Integral Driver.
   e. Install new Integral Driver, Driver Bracket, and Driver Screws (2) in same position as just removed old Integral Driver. Note: Make sure ratings on new Integral Driver are within ratings of fixture. See IG4 Specification Sheet. Use only Vision3 Lighting approved parts.
   f. Connect the Driver Quick Disconnect from the new Integral Driver to the existing COB Quick Disconnect.
   g. Install the COB LED Lamp Module as described in Lamp Module Installation.
   h. Install the Faceplate and Lens as described in Faceplate Installation.

7 - Aiming:

The aiming procedure depends on the type of Lamp Module and light engine option being used. See aiming instructions applicable to your particular fixture.

MR16H Standard Aiming Lamp Module:

1. Remove Faceplate as described in Lamp Module and Accessory Maintenance section.
2. Clean any dirt or debris off of the lamp module Top Plate. Use compressed 'air in a can' to blow off any particles.
3. Turn power on to the fixture. **Caution!** The fixture will become hot very quickly. While the power is on, avoid touching the lamp or lens accessories, as doing so may cause injury.
4. Unlock the aiming brackets by loosening the Vertical Locking Screw and Rotational Locking Screws (2) with a 3/32" Hex Tool.

MR16H Standard Aiming Lamp Module

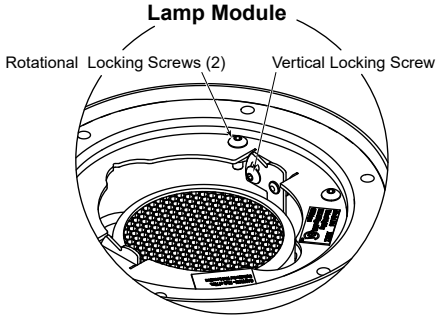

5. Rotate the lamp module Top Plate and swing the lamp brackets until the lamp is aiming in the desired direction. **Caution!** These parts will be very hot from the lamp. Use heat resistant gloves if necessary.
6. Once aimed in the desired direction, lock the aiming brackets by tightening the Vertical Locking Screw and Rotational Locking Screws (2) with a 3/32" Hex Tool.
7. Install the Faceplate and Lens as described in Faceplate Installation.

MR16H Joystick Aiming Lamp Module:

1. Remove Faceplate as described in Lamp Module and Accessory Maintenance section.
2. Remove the Trim Ring (if used) and clean any dirt or debris off of the lamp module Top Plate and around the Aiming Port. Use compressed 'air in a can' to blow out any particles in the recess around the Aiming Port. If this recess is not completely clean, it may make aiming more

MR16H Joystick Aiming Lamp Module

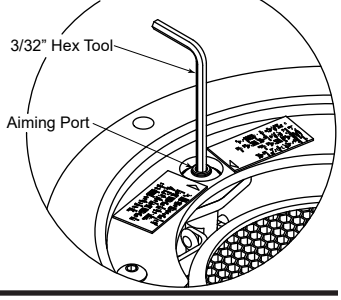

Installation Instructions

INSTRUCTIONS PERTAINING TO A RISK OF FIRE, OR INJURY TO PERSONS.
IMPORTANT SAFETY INSTRUCTIONS. SAVE THESE INSTRUCTIONS.
(Failure to follow the warnings and instructions on this sheet could result in fire, injury, failure of product, and/or voiding of warranty.)

difficult.

3. Turn power on to the fixture. **Caution!** The fixture will become hot very quickly. While the power is on, avoid touching any part of the fixture, as doing say may cause injury.
4. Stick a 3/32" Hex Tool into the Aiming Port hole. Move it around slightly until you can feel it drop in and engage the locking mechanism. **Caution!** Avoid touching any part of the fixture except for the 3/32" Hex Tool.
5. Unlock the aiming brackets by turning the 3/32" Hex Tool about 1/2 to 1 turn counter-clockwise.
6. Once the aiming brackets are unlocked, you can move the 3/32" Hex Tool around, like a joystick, and the aiming brackets will track this motion, aiming the Lamp where you point it. You can fine tune the tension on the locking mechanism by turning the 3/32" Hex Tool clockwise (increase tension) or counter-clockwise (decrease tension) to a point that satisfactorily allows you to aim the Lamp, yet holds position when you let go of the 3/32" Hex Tool. This allows you to concentrate more on aiming and less on holding the Lamp in position.
7. Once aimed in the desired direction, Rotate the 3/32" Hex Tool clockwise until the aiming brackets lock and hold position. It does not take much to lock the aiming brackets, so be careful to not overtighten.
8. Remove the 3/32" Hex Tool from the Aiming Port.
9. Re-install the Trim Ring (if used).
10. Install the Faceplate and Lens as described in Faceplate Installation.

LED / COB Joystick Aiming Lamp Module:

1. Remove Faceplate as described in Lamp Module and Accessory Maintenance section.
2. Clean any dirt or debris off of the lamp module Top Plate and around the Aiming Port. Use compressed ‘air in a can’ to blow out any particles in the recess around the Aiming Port. If this recess is not completely clean, it may make aiming more difficult.
3. Turn power on to the fixture. **Caution!** The fixture will become hot very quickly. While the power is on, avoid touching any part of the fixture, as doing say may cause injury.
4. Unlock the lamp module Top Plate by loosening the Rotational Locking Screws (2) with a 3/32" Hex Tool. This allows the Lamp Module to rotate, adjusting rotational aiming.
5. Stick a 3/32" Hex Tool into the Aiming Port hole. Move it around slightly until you can feel it drop in and engage the locking mechanism. **Caution!** Avoid touching any part of the fixture except for the 3/32" Hex Tool.
6. Unlock by turning the 3/32" Hex Tool about 1/2 to 1 turn counter-clockwise. This allows the brackets to swing, adjusting vertical aiming.
7. Use the 3/32" Hex Tool to rotate the lamp module Top Plate and swing the lamp brackets until the lamp is aiming in the desired direction. This can usually be done using just the hex tool, but if you need to touch any part of the fixture, exercise caution, these parts will be very hot from the lamp. Use heat resistant gloves if necessary.
8. Once aimed in the desired direction, rotate the 3/32" Hex Tool clockwise until the aiming brackets lock and hold position. It does not take much to lock the aiming brackets, so be careful to not overtighten.
9. Lock the lamp module Top Plate by tightening the Rotational Locking Screws (2) with a 3/32" Hex Tool.
10. Install the Faceplate and Lens as described in Faceplate Installation.
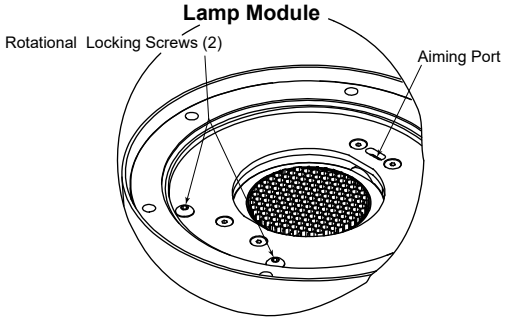
LED / COB Joystick Aiming Lamp Module